INNOVATION LEADS TO VALUE

SUNWARD

PRELIMINARY

SWTH 4014 | SWTH 4018 TELESCOPIC HANDLER

Standard functions

3-section boom - SWTH 4014 4-section boom - SWTH 4018	Quick coupler	Floating fork carriage	HV function
4-wheel drive	3 steering modes (2WS / 4WS / Crab)	Frame leveling	Stabilizers
Hydrostatic transmission	Off-road Pneumatic Tire	Longitudinal Load Moment Control (LLMC)	FOPS/ROPS certified cab
Oil Pipe anti-blasting System	Road lights	Work light	Rotating beacon
Electroproportional joystick	10.1" touch-screen display	Rear View Camera	Horn
Air conditioning	Radio Bluetooth	USB interface	Suspended seat

Optional Functions

Blue light	Engine preheating device	Windshield protection grid	

Optional Attachments

FEM Forks with carriage	General Purpose Bucket	Construction Bucket	Frame Mounted Hook

TECHNICAL PARAMETERS

Performance

			SWTH 4014	SWTH 4018
Overall dimensions (L x W x H)		mm	7 350 x 2 380 x 2 550	7 500 x 2 380 x 2 550
Basic parameters	Operating weight	kg	11 500	12 600
	Maximum load capacity	kg	4 000	4 000
	Maximum lifting height (with stabilizers)	m	13.60	17.6
	Maximum lifting height (without stabilizers)	m	12.55	12.48
	Maximum forward reach (with stabilizers)	m	9.46	13.40
	Maximum forward reach (without stabilizers)	m	9.50	9.72
	Maximum load capacity at full height (with stabilizers)	kg	3 000	2 500
	Maximum load capacity at full height (without stabilizers)	kg	2 000	2 000
	Maximum load capacity at maximum reach (with stabilizers)	kg	1 500	850
	Maximum load capacity at maximum reach (without stabilizers)	kg	300	400
	Frame leveling angle	°	+/-9	+/-9
	Ground clearance	mm	400	400
	Outside turning radius	m	4.25	4.25
	Drawbar pull	kN	80	80
Performances (no load)	Boom raise time	s	16	16
	Boom lower time	s	12	12
	Boom retract time	s	16	16
	Boom extend time	s	18	18
Power train	Transmission		Hydrostatic	Hydrostatic
	Number of gears (forward / reverse)		2/2	2/2
	Maximum travel speed	km/h	25	25
	Gradeability	%	50	50
Engine	Engine brand		Kubota	Kubota
	Engine model		V3307	V3307
	Engine rated power	kW	55.4	55.4
	Maximum torque	N.m	335	335
	Fuel injection system		Electronic injection	Electronic injection
	Cooling system		Water cooling	Water cooling
System capacity	Hydraulic oil tank capacity	L	170	170
	Fuel tank capacity	L	140	140
	Engine oil capacity	L	11.2	11.2
	Engine coolant capacity	L	13	13
Pallet forks	Dimensions (L × W × H)	mm	1 200 x 125 x 50	1 200 x 125 x 50
Tires	Dimensions		400/80-24	400/80-24

SWTH 4014 | SWTH 4018

Dimensions

			SWTH 4014	SWTH 4018
A	Length to fork carriage	mm	6 150	6 300
B	Width	mm	2 380	2 380
C	Height	mm	2 550	2 550
D	Wheelbase	mm	3 070	3 070
E	Ground clearance	mm	400	400
F	Track width	mm	1 960	1 960
G	Cab width	mm	950	950
H	Length to front wheel	mm	4 745	4 895

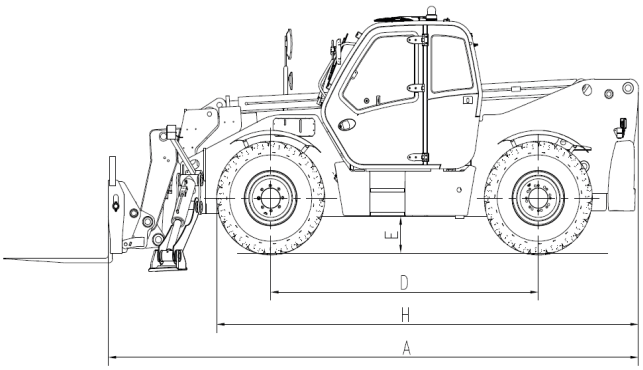

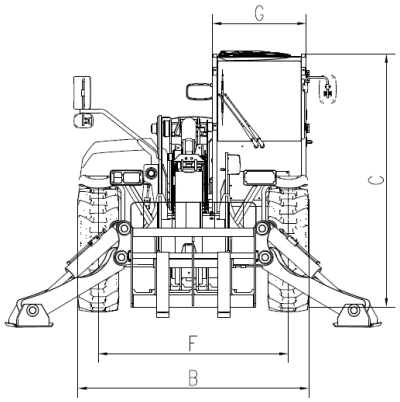

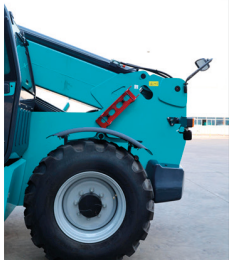

LOAD CHARTS SWTH 4014

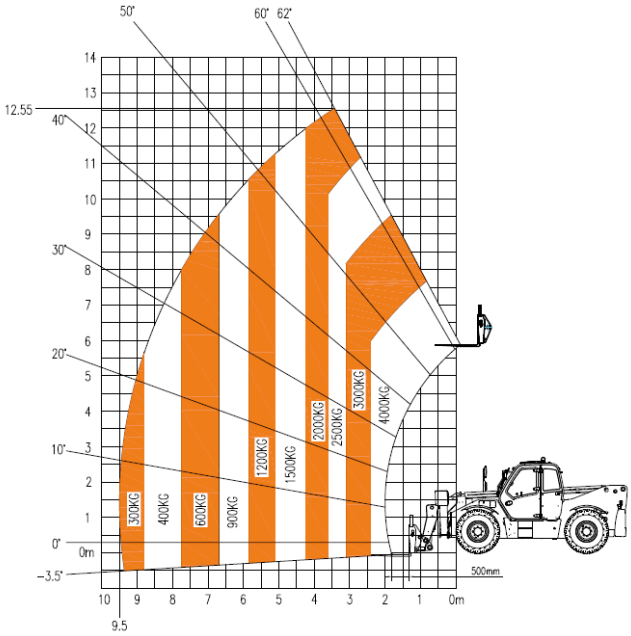

Without stabilizers, with chassis leveling

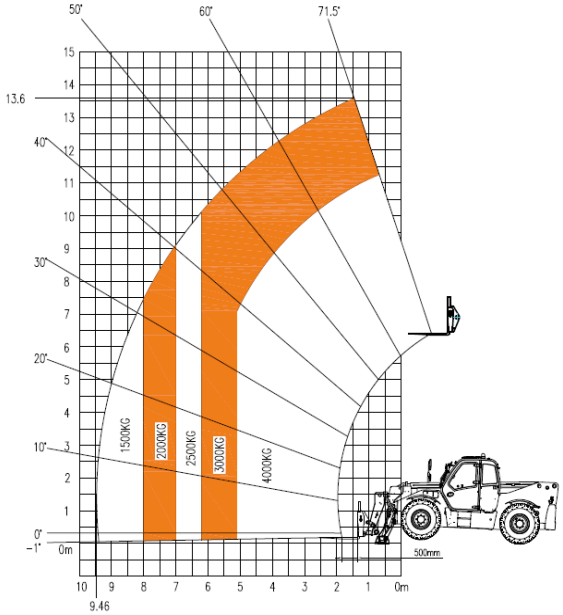

With stabilizers

LOAD CHARTS SWTH 4018

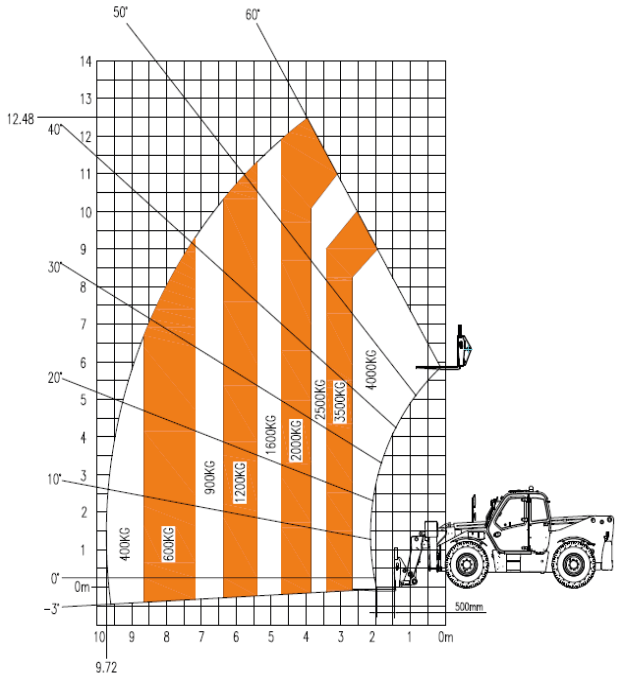

Without stabilizers, with chassis leveling

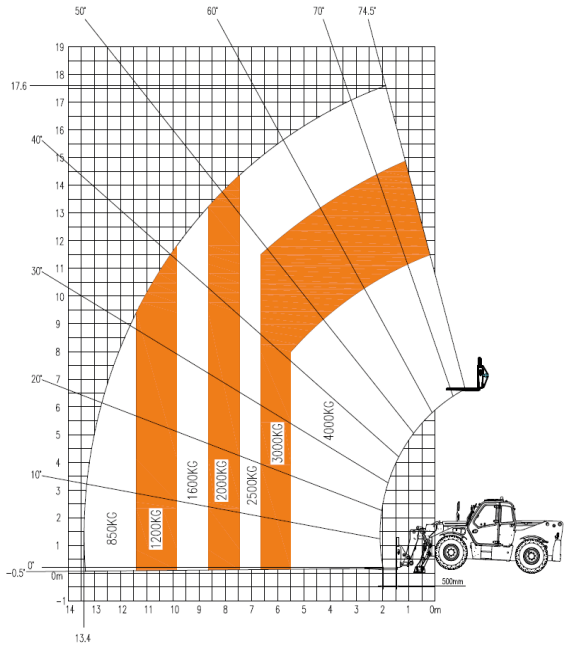

With stabilizers

SUNWARD EUROPE HEAVY INDUSTRY N.V.
Havenlaan 1, 3980 TESSENDERLO-HAM, Belgium
Tél. : +32 (0) 11 43 46 66 | E-mail : info.eu@sunward.cc | Web : www.sunward.eu